GOOD-ARK SEMICONDUCTOR

SSFQ4906

40V N-Channel MOSFET

Main Product Characteristics

$V_{(BR)DSS}$	40V
$R_{DS(ON)}$	9mΩ
I_D	9A

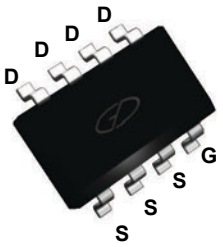

SOP-8

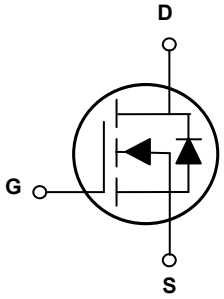

Schematic Diagram

Features and Benefits

- Advanced MOSFET process technology
- Ideal for high efficiency switched mode power supplies
- Low on-resistance with low gate charge
- Fast switching and reverse body recovery

Description

The SSFQ4906 utilizes the latest techniques to achieve high cell density and low on-resistance. These features make this device extremely efficient and reliable for use in high efficiency switch mode power supplies and a wide variety of other applications.

Absolute Maximum Ratings (T_C=25°C unless otherwise specified)

Parameter		Symbol	Max.	Unit
Drain-Source Voltage		V_{DS}	40	V
Gate-Source Voltage		V_{GS}	±20	V
Drain Current-Continuous (T_A=25°C)		I_D	9	A
Drain Current-Continuous (T_A=100°C)			5.7	
Drain Current-Continuous (T_C=25°C)			15	
Drain Current-Continuous (T_C=100°C)			9.5	
Drain Current-Pulsed[1]		I_{DM}	36	A
Single Pulse Avalanche Energy[2]		E_{AS}	76	mJ
Single Pulse Avalanche Current[2]		I_{AS}	39	A
Power Dissipation	(T_A=25°C)	P_D	1.47	W
	Derate above 25°C		0.012	W/°C
Power Dissipation	(T_C=25°C)		5.4	W
	Derate above 25°C		1.47	W/°C
Thermal Resistance, Junction-to-Ambient		$R_{\theta JA}$	62.5	°C/W
Operating Junction Temperature Range		T_J	-55 To +150	°C
Storage Temperature Range		T_{STG}	-55 To +150	°C

Electrical Characteristics (T_J=25°C unless otherwise specified)

Parameter	Symbol	Conditions	Min.	Typ.	Max.	Unit
On / Off Characteristics						
Drain-Source Breakdown Voltage	BV_{DSS}	V_{GS}=0V, I_D=250uA	40	-	-	V
BV_{DSS} Temperature Coefficient	$\triangle BV_{DSS}/\triangle T_J$	Reference to 25°C, I_D=1mA	-	0.03	-	V/°C
Drain-Source Leakage Current	I_{DSS}	V_{DS}=40V, V_{GS}=0V, T_J=25°C	-	-	1	μA
		V_{DS}=32V, V_{GS}=0V, T_J=85°C	-	-	10	μA
Gate-Source Leakage Current	I_{GSS}	V_{GS}=±20V, V_{DS}=0V	-	-	±100	nA
Static Drain-Source On-Resistance	$R_{DS(ON)}$	V_{GS}=10V, I_D=8A	-	7	9	mΩ
		V_{GS}=4.5V, I_D=4A	-	9.5	13	
Gate Threshold Voltage	$V_{GS(th)}$	V_{GS}=V_{DS}, I_D=250uA	1.2	1.8	2.5	V
$V_{GS(th)}$ Temperature Coefficient	$\triangle V_{GS(th)}$		-	-5	-	mV/°C
Forward Transconductance	g_{fs}	V_{DS}=10V, I_D=10A	-	13	-	S
Dynamic and Switching Characteristics						
Total Gate Charge[2,3]	Q_g	V_{DS}=20V, I_D=8A V_{GS}=4.5V	-	12.2	24	nC
Gate-Source Charge[2,3]	Q_{gs}		-	3.3	7	
Gate-Drain Charge[2,3]	Q_{gd}		-	6.7	13	
Turn-On Delay Time[2,3]	$t_{d(on)}$	V_{DD}=15V, R_G=3.3Ω V_{GS}=10V, I_D=1A	-	13.2	25	nS
Rise Time[2,3]	t_r		-	2.2	5	
Turn-Off Delay Time[2,3]	$t_{d(off)}$		-	72	130	
Fall Time[2,3]	t_f		-	4.5	10	
Input Capacitance	C_{Iss}	V_{DS}=25V, V_{GS}=0V, F=1MHz	-	1220	2200	pF
Output Capacitance	C_{oss}		-	130	250	
Reverse Transfer Capacitance	C_{rss}		-	55	110	
Gate Resistance	R_g	V_{GS}=0V, V_{DS}=0V, F=1MHz	-	2.2	-	Ω
Drain-Source Diode Characteristics and Maximum Ratings						
Continuous Source Current	I_S	V_G=V_D=0V, Force Current	-	-	15	A
Pulsed Source Current	I_{SM}		-	-	30	A
Diode Forward Voltage	V_{SD}	V_{GS}=0V, I_S=1A, T_J=25°C	-	-	1	V
Reverse Recovery Time	T_{rr}	V_{GS}=0V, I_S=1A, di/dt=100A/μs T_J=25℃	-	17	-	ns
Reverse Recovery Charge	Q_{rr}		-	2.8	-	nC

Note:

1. Repetitive Rating: Pulsed width limited by maximum junction temperature.
2. The data tested by pulsed, pulse width ≦ 300uS, duty cycle ≦ 2%.
3. Essentially independent of operating temperature.

Typical Electrical and Thermal Characteristic Curves

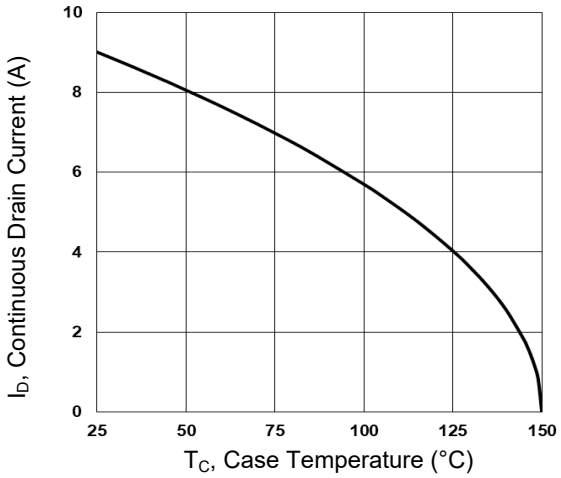

Figure 1. Continuous Drain Current vs. T_C

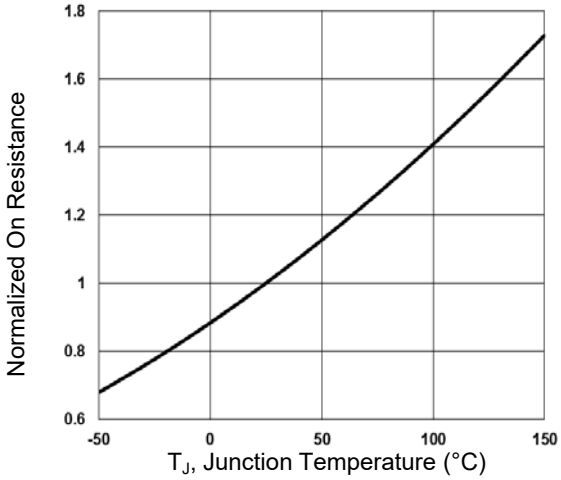

Figure 2. Normalized R_{DSON} vs. T_J

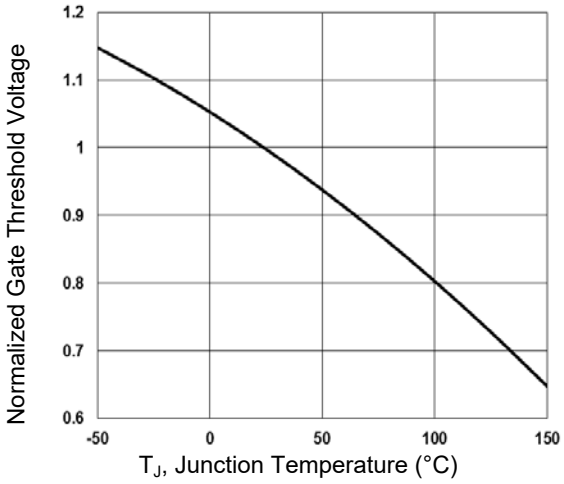

Figure 3. Normalized V_{th} vs. T_J

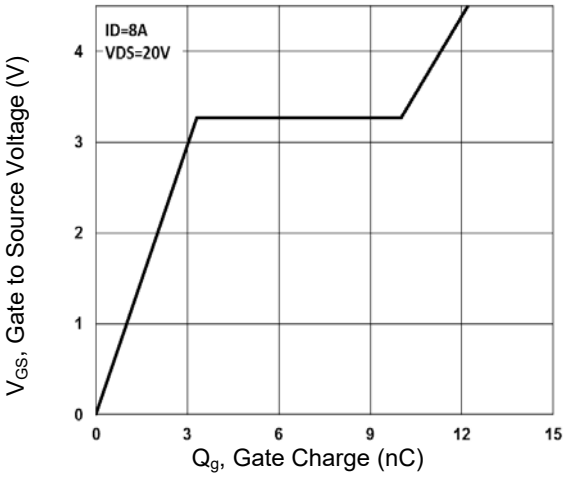

Figure 4. Gate Charge Waveform

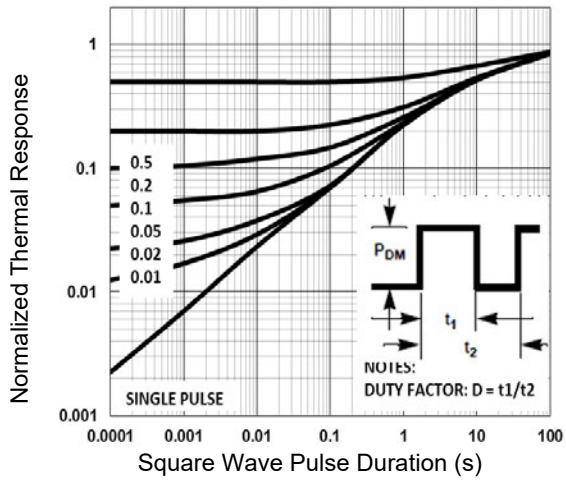

Figure 5. Normalized Transient Impedance

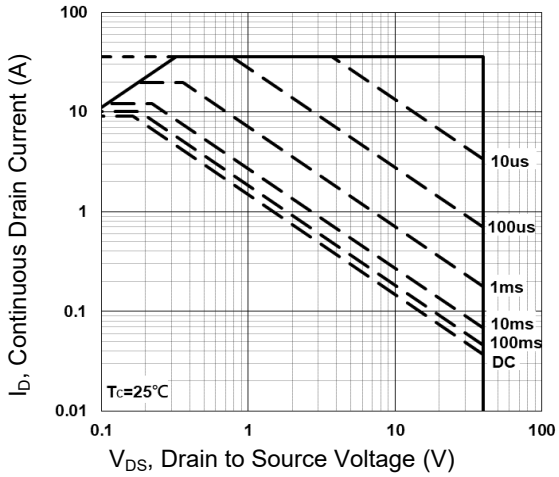

Figure 6. Maximum Safe Operation Area

Typical Electrical and Thermal Characteristic Curves

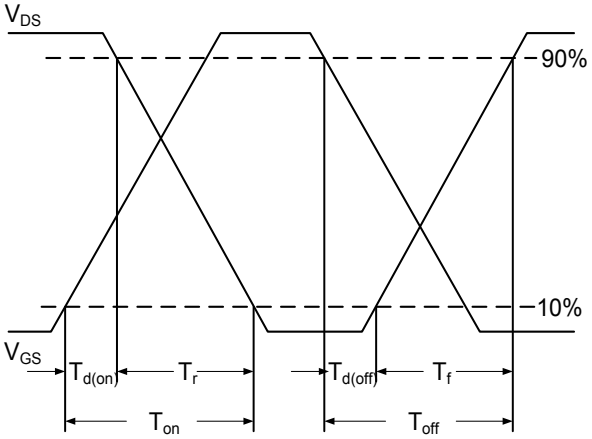

Figure 7. Switching Time Waveform

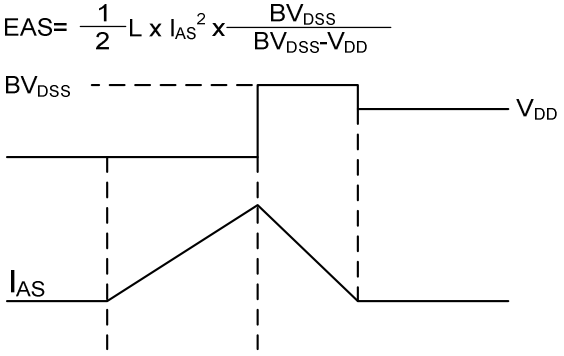

Figure 8. EAS Waveform

Package Outline Dimensions (SOP-8)

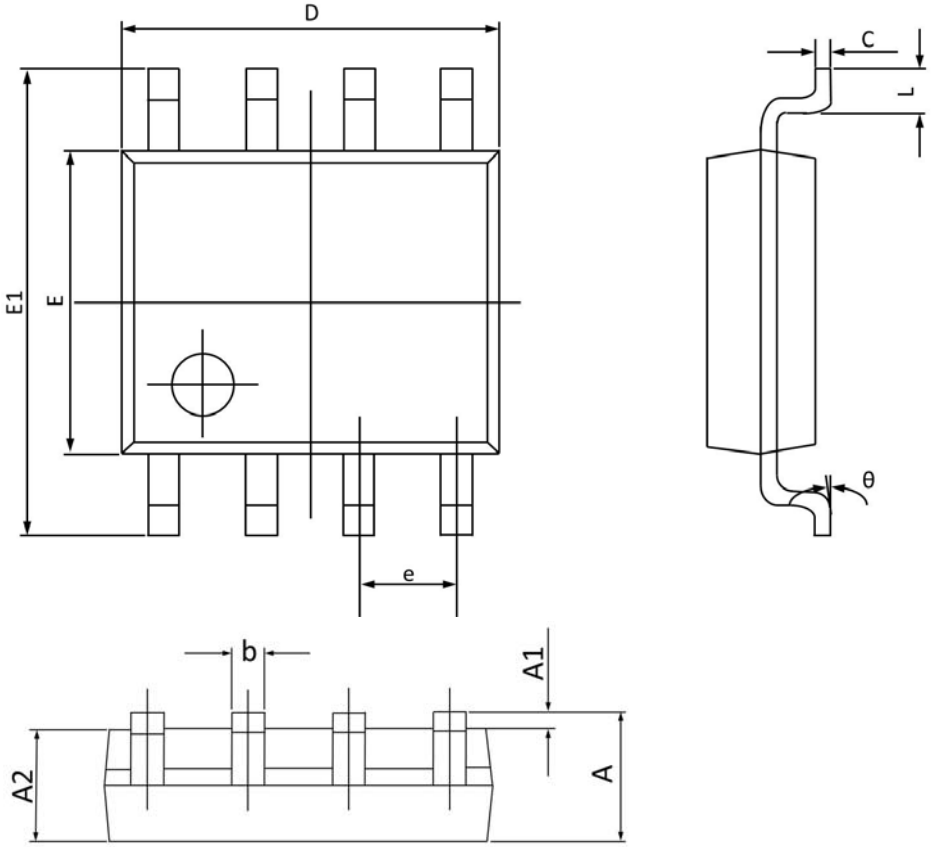

Symbol	Dimensions in Millimeters		Dimensions in Inches	
	Min	Max	Min	Max
A	1.350	1.800	0.053	0.069
A1	0.050	0.250	0.002	0.010
A2	1.250	1.650	0.049	0.065
A3	0.500	0.700	0.020	0.028
b	0.300	0.510	0.012	0.020
c	0.150	0.260	0.006	0.010
D	4.700	5.100	0.185	0.201
E	5.800	6.200	0.228	0.244
E1	3.700	4.100	0.146	0.161
e	1.270 BSC		0.050 BSC	
h	0.250	0.500	0.010	0.020
L	0.400	1.000	0.016	0.039
L1	1.050 BSC		0.041 BSC	
θ	0°	8°	0°	8°