GOOD-ARK SEMICONDUCTOR

GSGD06120

60V N-Channel MOSFET

Main Product Characteristics

V_{DS}	60V
$R_{DS(ON)}$	4mΩ
I_D	120A

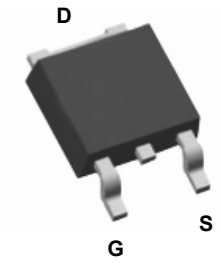

TO-252 (DPAK)

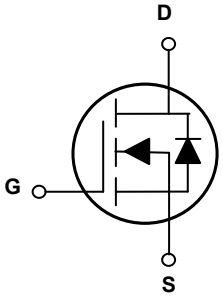

Schematic Diagram

Features and Benefits

- Advanced MOSFET process technology
- Ideal for high efficiency switched mode power supplies
- Low on-resistance with low gate charge
- Fast switching and reverse body recovery

Description

The GSGD06120 utilizes the latest techniques to achieve high cell density and low on-resistance. These features make this device extremely efficient and reliable for use in high efficiency switch mode power supply and a wide variety of other applications.

Absolute Maximum Ratings (T_C=25°C unless otherwise specified)

Parameter	Symbol	Max.	Unit
Drain-Source Voltage	V_{DS}	60	V
Gate-Source Voltage	V_{GS}	±20	V
Drain Current-Continuous (Silicon Limited)	I_D	120	A
Drain Current-Continuous (T_C=100°C)	I_D (100°C)	100	A
Pulsed Drain Current	I_{DM}	480	A
Maximum Power Dissipation	P_D	180	W
Derating Factor		1.2	W/°C
Single Pulse Avalanche Energy[5]	E_{AS}	500	mJ
Operating Junction and Storage Temperature Range	T_J, T_{STG}	-55 To +175	°C
Thermal Resistance, Junction-to-Case[2]	$R_{\theta JC}$	0.83	°C/W

Electrical Characteristics (T_C=25°C unless otherwise specified)

Parameter	Symbol	Conditions	Min.	Typ.	Max.	Unit
Off Characteristics						
Drain-Source Breakdown Voltage	BV_{DSS}	V_{GS}=0V I_D=250μA	60	-	-	V
Zero Gate Voltage Drain Current	I_{DSS}	V_{DS}=60V, V_{GS}=0V	-	-	1	μA
Gate-Body Leakage Current	I_{GSS}	V_{GS}=±20V, V_{DS}=0V	-	-	±100	nA
On Characteristics[3]						
Gate Threshold Voltage	$V_{GS(th)}$	V_{DS}=V_{GS}, I_D=250μA	1	1.7	2.4	V
Drain-Source On-State Resistance	$R_{DS(ON)}$	V_{GS}=10V, I_D=60A	-	3.5	4	mΩ
		V_{GS}=4.5V, I_D=60A	-	4	5	
Forward Transconductance	g_{FS}	V_{DS}=10V, I_D=60A	40	-	-	S
Dynamic Characteristics[4]						
Input Capacitance	Clss	VDS=30V, VGS=0V, F=1.0MHz	-	4000	-	PF
Output Capacitance	Coss		-	680	-	PF
Reverse Transfer Capacitance	Crss		-	23	-	PF
Switching Characteristics[4]						
Turn-On Delay Time	$t_{d(on)}$	V_{DD}=30V, I_D=60A V_{GS}=10V,R_G=4.7Ω	-	11	-	nS
Turn-On Rise Time	t_r		-	5	-	nS
Turn-Off Delay Time	$t_{d(off)}$		-	56	-	nS
Turn-Off Fall Time	t_f		-	12	-	nS
Total Gate Charge	Q_g	V_{DS}=30V, I_D=60A, V_{GS}=10V	-	67	-	nC
Gate-Source Charge	Q_{gs}		-	12	-	nC
Gate-Drain Charge	Q_{gd}		-	8.5	-	nC
Drain-Source Diode Characteristics						
Diode Forward Voltage[3]	V_{SD}	V_{GS}=0V, I_S=120A	-	-	1.2	V
Diode Forward Current[2]	I_S		-	-	120	A
Reverse Recovery Time	t_{rr}	T_J = 25°C, I_F = I_S, di/dt=100A/μs[3]	-	48	-	nS
Reverse Recovery Charge	Q_{rr}		-	60	-	nC

Notes:
1. Repetitive Rating: Pulse width limited by maximum junction temperature.
2. Surface Mounted on FR4 Board, t ≤ 10 sec.
3. Pulse Test: Pulse Width ≤ 300μs, Duty Cycle ≤ 2%.
4. Guaranteed by design, not subject to production
5. EAS condition:Tj=25℃,VDD=30V,VG=10V,L=0.5mH,Rg=25Ω

Typical Electrical and Thermal Characteristic Curves

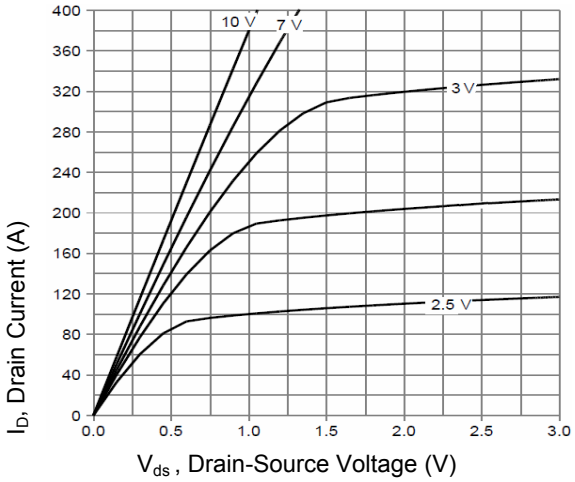

Figure 1. Output Characteristics

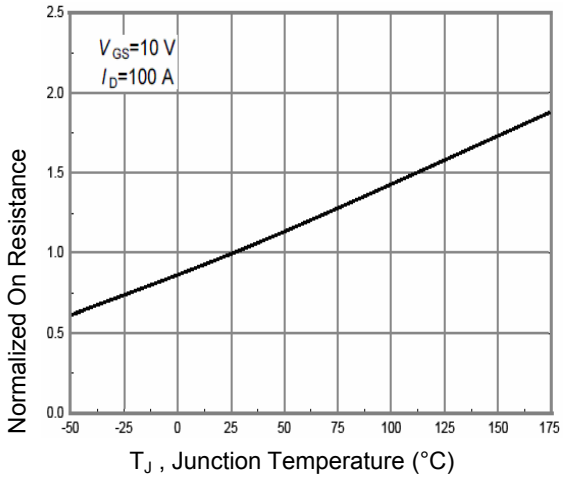

Figure 2. R_{DSON}-Junction Temperature

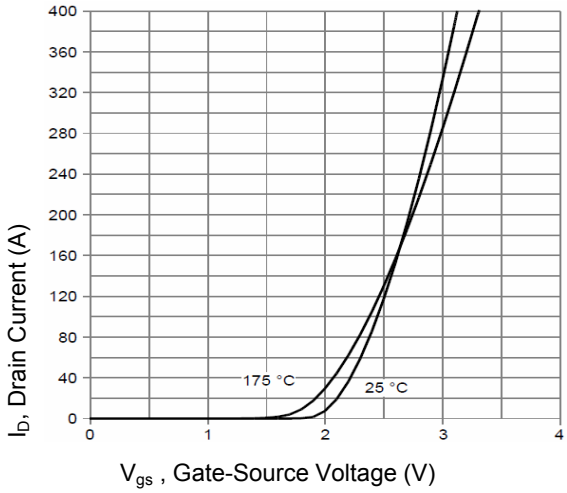

Figure 3. Transfer Characteristics

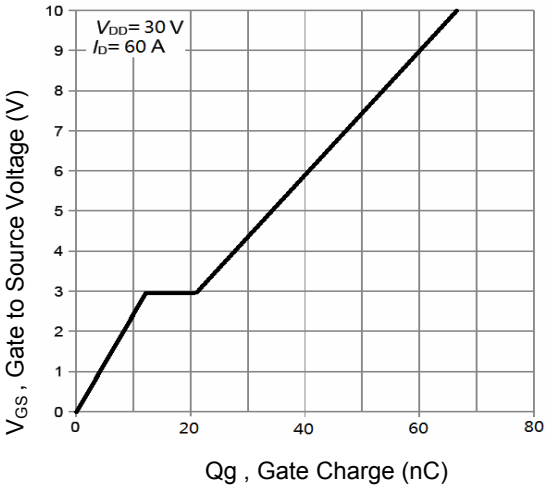

Figure 4. Gate Charge Waveform

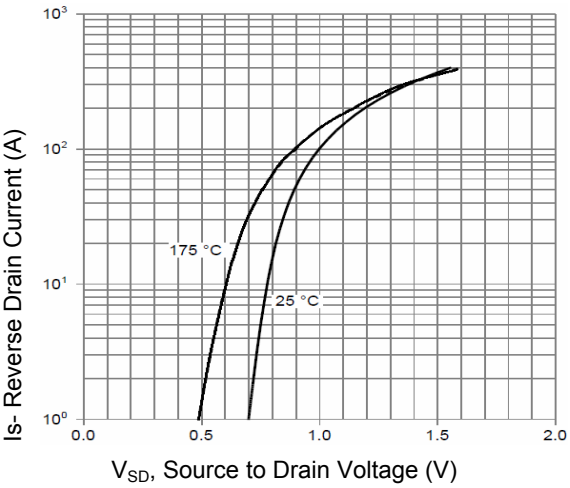

Figure 5. Source-Drain Diode Forward

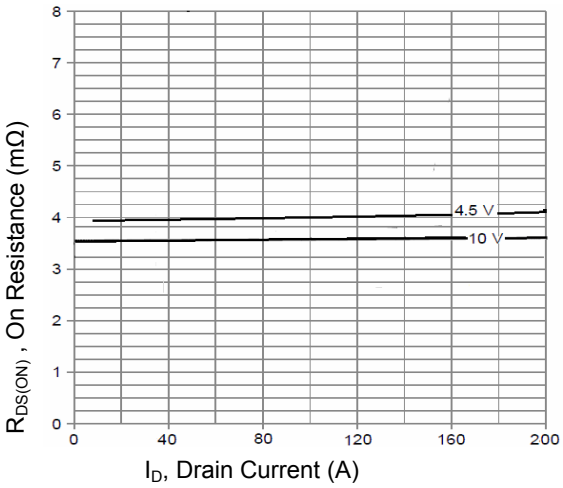

Figure 6. R_{dson}-Drain Current

Typical Electrical and Thermal Characteristic Curves

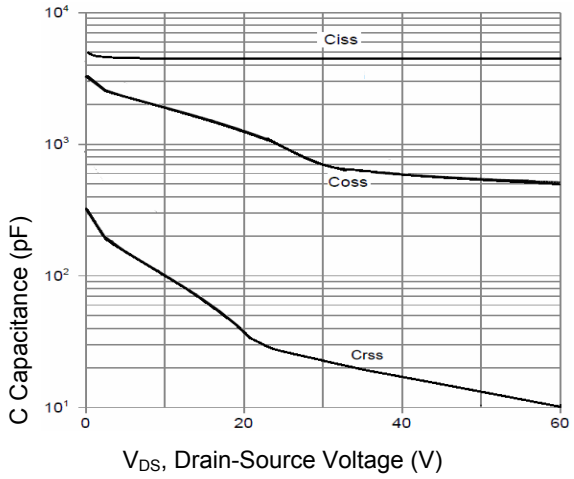

Figure 7. Capacitance vs. V_{DS}

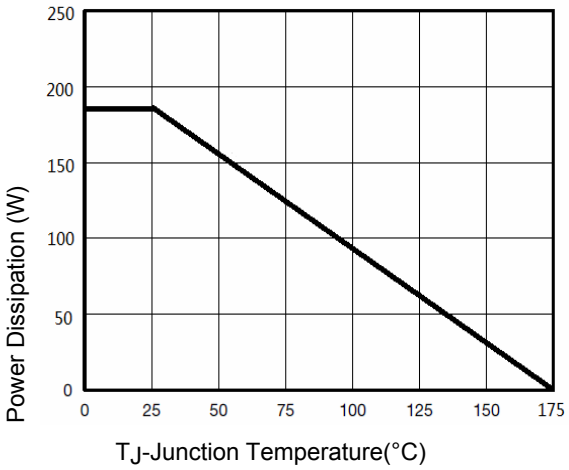

Figure 8. Power De-rating

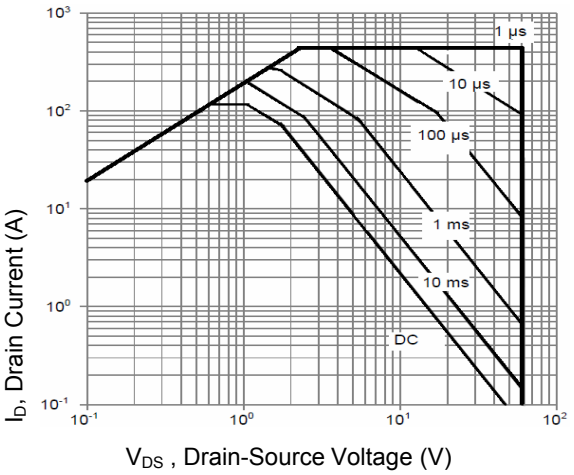

Figure 9. Safe Operation Area

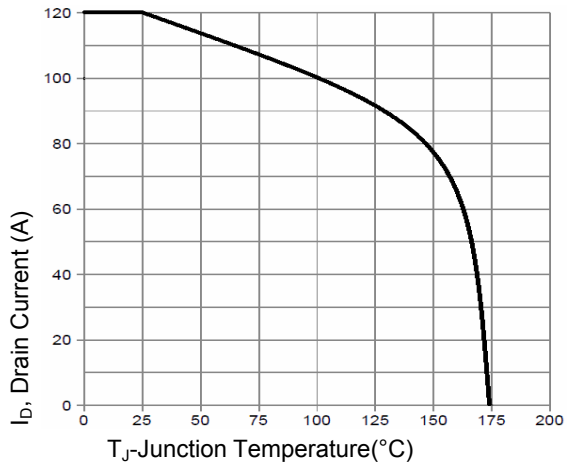

Figure 10. Current De-rating

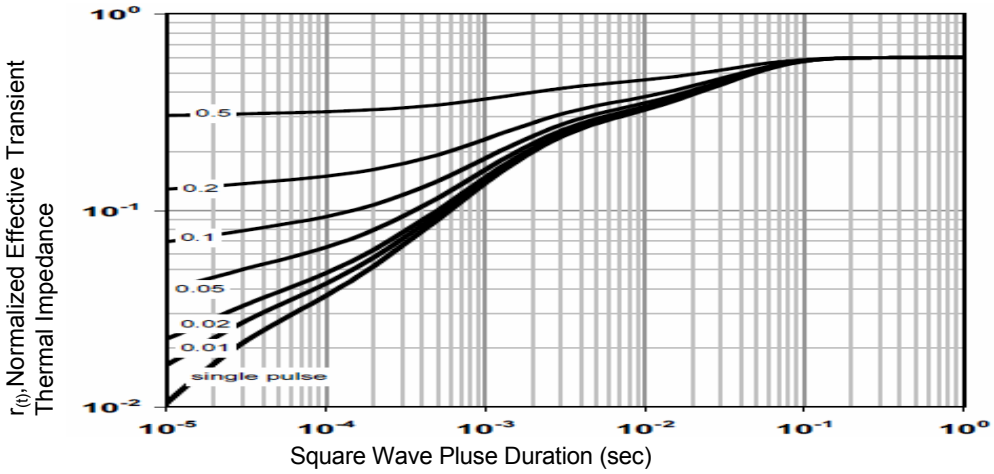

Figure 11. Normalized Maximum Transient Thermal Impedance

Typical Electrical and Thermal Characteristic Curves

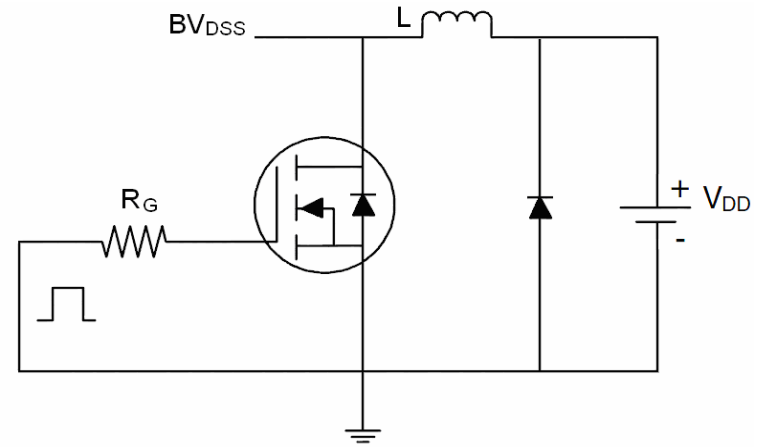

Firgure 12. E_{AS} Test Circuit

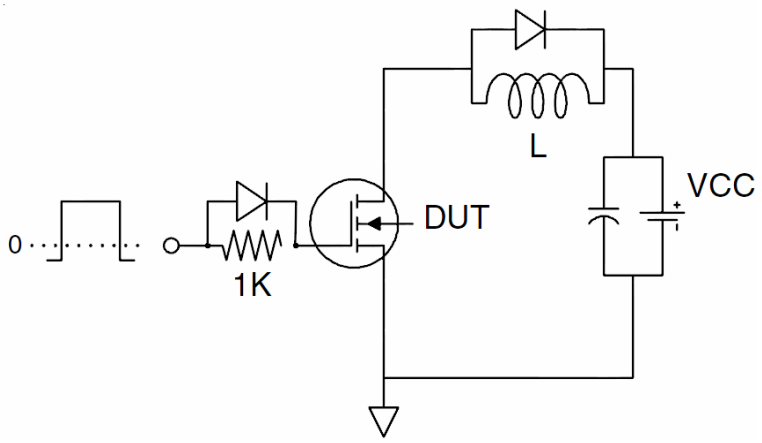

Firgure 13. Gate Charge Test Circuit

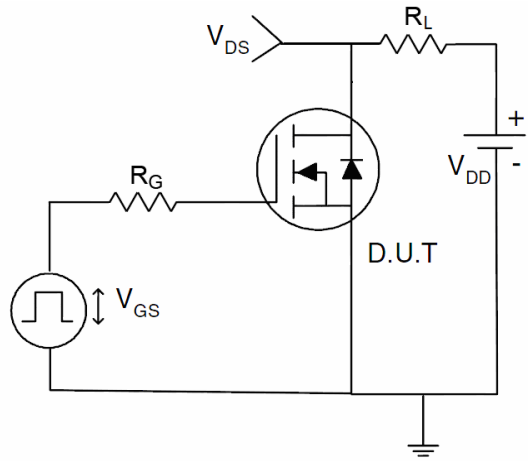

Firgure 14. Switch Time Test Circuit

Package Outline Dimensions (TO-252)

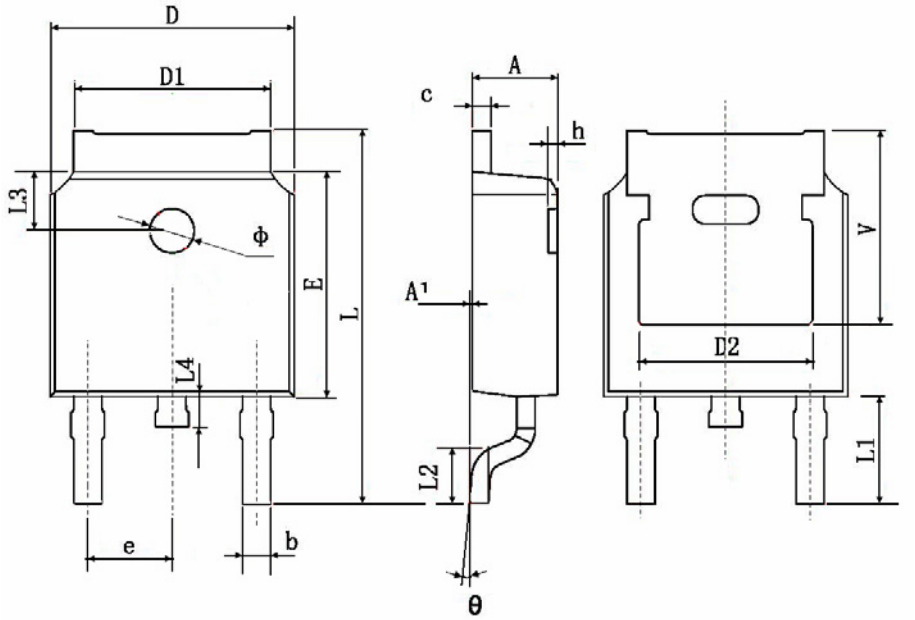

Symbol	Dimensions In Millimeters		Dimensions In Inches	
	Min.	Max.	Min.	Max.
A	2.200	2.400	0.087	0.094
A1	0.000	0.127	0.000	0.005
b	0.660	0.860	0.026	0.034
c	0.460	0.580	0.018	0.023
D	6.500	6.700	0.256	0.264
D1	5.100	5.460	0.201	0.215
D2	4.830 TYP.		0.190 TYP.	
E	6.000	6.200	0.236	0.244
e	2.186	2.386	0.086	0.094
L	9.800	10.400	0.386	0.409
L1	2.900 TYP.		0.114 TYP.	
L2	1.400	1.700	0.055	0.067
L3	1.600 TYP.		0.063 TYP.	
L4	0.600	1.000	0.024	0.039
Φ	1.100	1.300	0.043	0.051
θ	0°	8°	0°	8°
h	0.000	0.300	0.000	0.012
V	5.350 TYP.		0.211 TYP.	