GOOD-ARK SEMICONDUCTOR

# GSFQ6904

**60V N-Channel MOSFET**

## Main Product Characteristics

| | |
|---|---|
| $V_{(BR)DSS}$ | 60V |
| $R_{DS(ON)}$ | 12mΩ |
| $I_D$ | 10A |

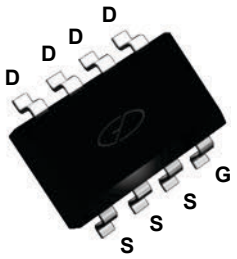


SOP-8

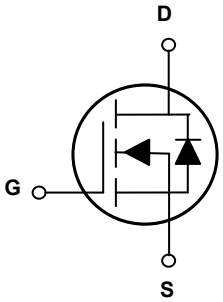


Schematic Diagram

## Features and Benefits

- Advanced MOSFET process technology
- Ideal for high efficiency switched mode power supplies
- Low on-resistance with low gate charge
- Fast switching and reverse body recovery

## Description

The GSFQ6904 utilizes the latest techniques to achieve high cell density and low on-resistance. These features make this device extremely efficient and reliable for use in high efficiency switch mode power supply and a wide variety of other applications.

## Absolute Maximum Ratings ($T_C$=25°C unless otherwise specified)

| Parameter | Symbol | Max. | Unit |
|---|---|---|---|
| Drain-Source Voltage | $V_{DS}$ | 60 | V |
| Gate-Source Voltage | $V_{GS}$ | ±20 | V |
| Drain Current-Continuous ($T_C$=25°C) | $I_D$ | 10 | A |
| Drain Current-Continuous ($T_C$=100°C) | | 6.3 | |
| Drain Current-Pulsed[1] | $I_{DM}$ | 40 | A |
| Single Pulse Avalanche Energy[2] | $E_{AS}$ | 61 | mJ |
| Single Pulse Avalanche Current[2] | $I_{AS}$ | 35 | A |
| Power Dissipation ($T_C$=25°C) | $P_D$ | 2.5 | W |
| Power Dissipation-Derate above 25°C | | 0.02 | W/°C |
| Thermal Resistance, Junction-to-Ambient | $R_{\theta JA}$ | 50 | °C/W |
| Operating Junction Temperature Range | $T_J$ | -55 To +150 | °C |
| Storage Temperature Range | $T_{STG}$ | -55 To +150 | °C |

## Electrical Characteristics ($T_J$=25°C unless otherwise specified)

| Parameter | Symbol | Conditions | Min. | Typ. | Max. | Unit |
|---|---|---|---|---|---|---|
| **On/Off Characteristics** | | | | | | |
| Drain-Source Breakdown Voltage | $BV_{DSS}$ | $V_{GS}$=0V, $I_D$=250μA | 60 | - | - | V |
| $BV_{DSS}$ Temperature Coefficient | $\Delta BV_{DSS}/\Delta T_J$ | Reference to 25°C, $I_D$=1mA | - | 0.07 | - | V/°C |
| Drain-Source Leakage Current | $I_{DSS}$ | $V_{DS}$=60V, $V_{GS}$=0V, $T_J$=25°C | - | - | 1 | μA |
| | | $V_{DS}$=48V, $V_{GS}$=0V, $T_J$=125°C | - | - | 10 | μA |
| Gate-Source Leakage Current | $I_{GSS}$ | $V_{GS}$=±20V, $V_{DS}$=0V | - | - | ±100 | nA |
| Static Drain-Source On-Resistance[3] | $R_{DS(ON)}$ | $V_{GS}$=10V, $I_D$=10A | - | 10 | 12 | mΩ |
| | | $V_{GS}$=4.5V, $I_D$=6A | - | 12 | 15 | |
| Gate Threshold Voltage | $V_{GS(th)}$ | $V_{GS}$=$V_{DS}$, $I_D$=250μA | 1.2 | 1.6 | 2.5 | V |
| $V_{GS(th)}$ Temperature Coefficient | $\Delta V_{GS(th)}$ | | - | -4 | - | mV/°C |
| Forward Transconductance | $g_{fs}$ | $V_{DS}$=10V, $I_D$=6A | - | 11.7 | - | S |
| **Dynamic and Switching Characteristics** | | | | | | |
| Total Gate Charge[3,4] | $Q_g$ | $V_{DS}$=30V, $I_D$=10A, $V_{GS}$=10V | - | 39.2 | 59 | nC |
| Gate-Source Charge[3,4] | $Q_{gs}$ | | - | 5.9 | 9 | |
| Gate-Drain Charge[3,4] | $Q_{gd}$ | | - | 8.8 | 14 | |
| Turn-On Delay Time[3,4] | $t_{d(on)}$ | $V_{DD}$=15V, $R_G$=6Ω, $V_{GS}$=10V, $I_D$=1A | - | 9.6 | 18 | nS |
| Rise Time[3,4] | $t_r$ | | - | 28.2 | 54 | |
| Turn-Off Delay Time[3,4] | $t_{d(off)}$ | | - | 45.3 | 86 | |
| Fall Time[3,4] | $t_f$ | | - | 10.9 | 21 | |
| Input Capacitance | $C_{iss}$ | $V_{DS}$=25V, $V_{GS}$=0V, F=1MHz | - | 2100 | 3050 | pF |
| Output Capacitance | $C_{oss}$ | | - | 165 | 240 | |
| Reverse Transfer Capacitance | $C_{rss}$ | | - | 80 | 120 | |
| Gate Resistance | $R_g$ | $V_{GS}$=0V, $V_{DS}$=0V, F=1MHz | - | 1.6 | 3.2 | Ω |
| **Drain-Source Diode Characteristics and Maximum Ratings** | | | | | | |
| Continuous Source Current | $I_S$ | $V_G$=$V_D$=0V, Force Current | - | - | 10 | A |
| Pulsed Source Current[3] | $I_{SM}$ | | - | - | 40 | A |
| Diode Forward Voltage[3] | $V_{SD}$ | $V_{GS}$=0V, $I_S$=1A, $T_J$=25°C | - | - | 1 | V |

Note:

1. Repetitive rating: Pulsed width limited by maximum junction temperature.
2. $V_{DD}$=25V, $V_{GS}$=10V, L=0.1mH, $I_{AS}$=35A, $R_G$=25Ω,starting $T_J$=25°C.
3. Pulse test: pulse width ≤300us,duty cycle≤2%.
4. Essentially independent of operation temperature.

## Typical Electrical and Thermal Characteristic Curves

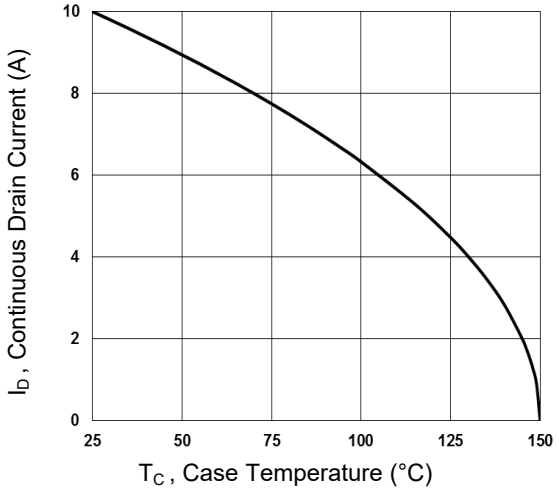


**Figure 1. Continuous Drain Current vs. $T_C$**

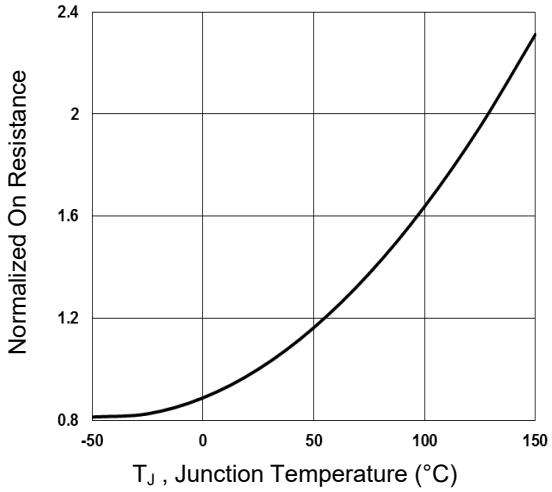


**Figure 2. Normalized $R_{DSON}$ vs. $T_J$**

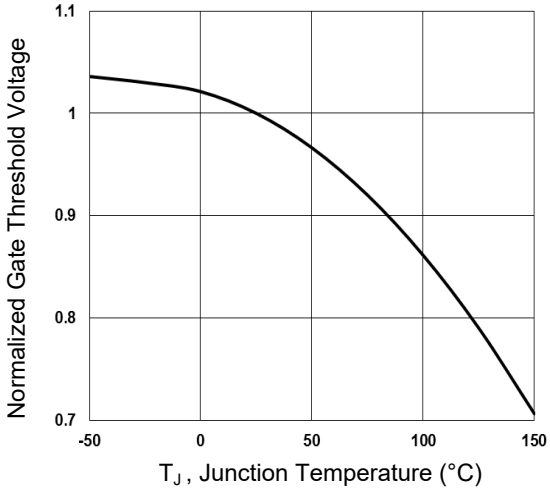


**Figure 3. Normalized $V_{th}$ vs. $T_J$**

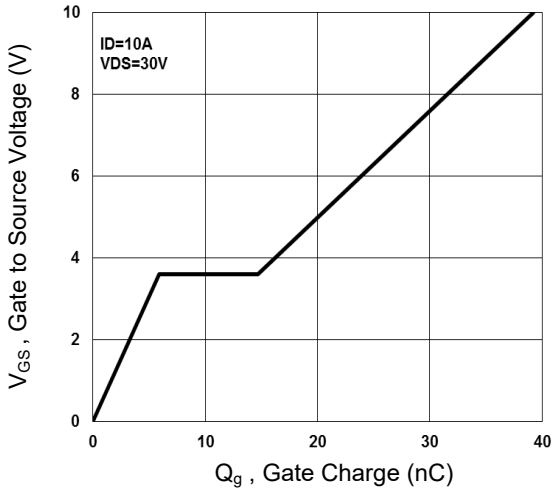


**Figure 4. Gate Charge Waveform**

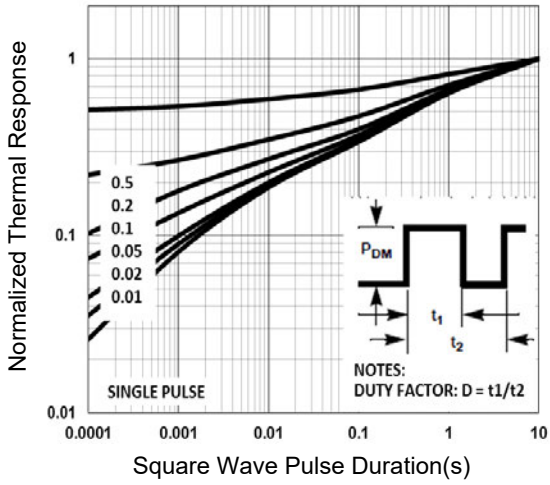


**Figure 5. Normalized Transient Response**

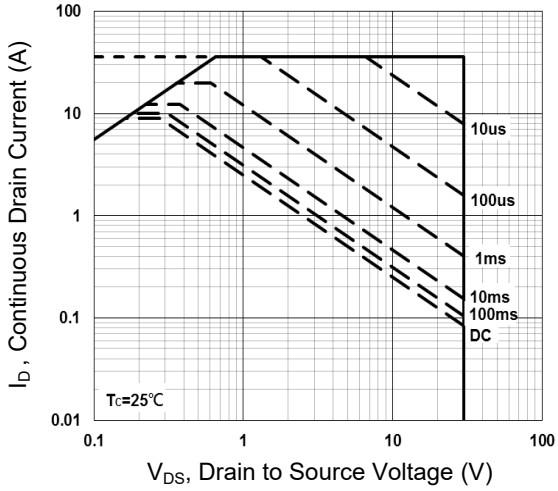


**Figure 6. Maximum Safe Operation Area**

## Typical Electrical and Thermal Characteristic Curves

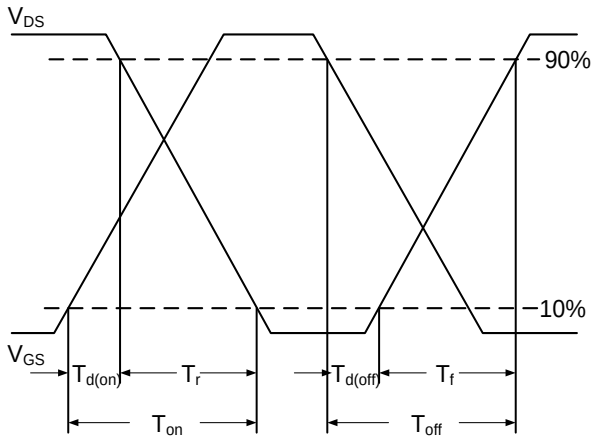


**Figure 7. Switching Time Waveform**

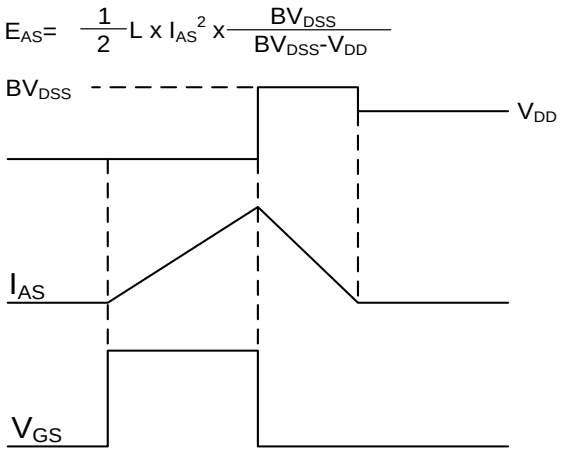


**Figure 8. EAS Waveform**

## Package Outline Dimensions SOP-8

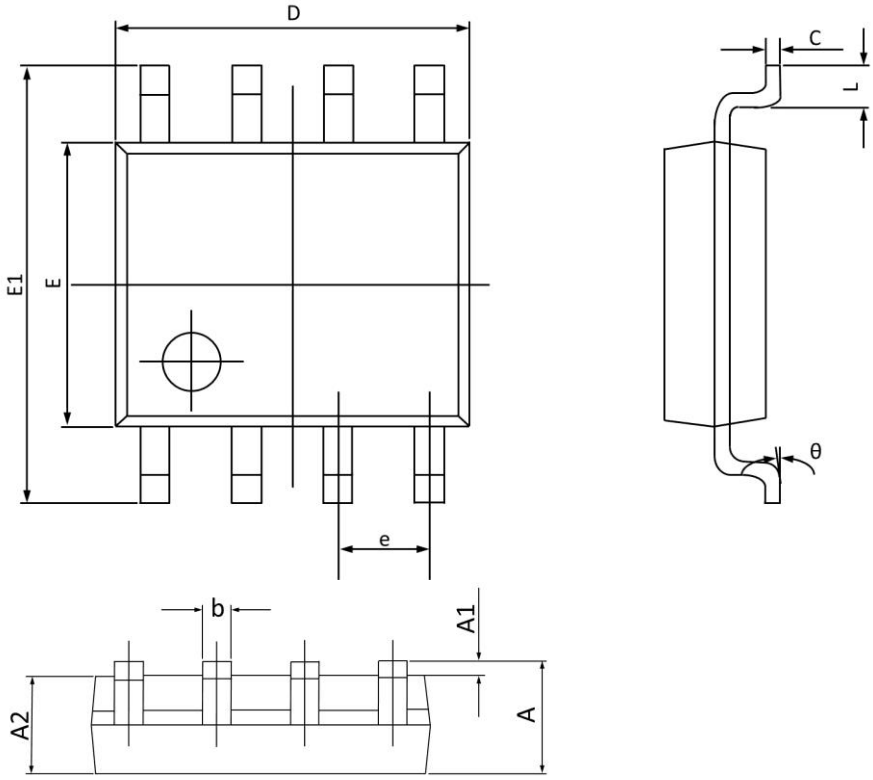


| Symbol | Dimensions In Millimeters | | Dimensions In Inches | |
|---|---|---|---|---|
| | MAX | MIN | MAX | MIN |
| A | 1.750 | 1.350 | 0.069 | 0.053 |
| A1 | 0.250 | 0.100 | 0.010 | 0.004 |
| A2 | 1.500 | 1.300 | 0.059 | 0.051 |
| b | 0.490 | 0.350 | 0.019 | 0.014 |
| C | 0.260 | 0.190 | 0.010 | 0.007 |
| D | 5.100 | 4.700 | 0.201 | 0.185 |
| E | 4.100 | 3.700 | 0.161 | 0.146 |
| E1 | 6.200 | 5.800 | 0.244 | 0.228 |
| e | 1.27BSC | | 0.05BSC | |
| L | 0.900 | 0.400 | 0.035 | 0.016 |
| θ | 8° | 0° | 8° | 0° |